AUTONOMY AND FDIR CHALLENGES FOR THE BEPICOLOMBO MISSION TO MERCURY

C. Steiger [(1)], A. Pasetti [(2)], P. Espeillac [(3)], T. Strandberg [(4)], M. Casasco [(5)], A. Altay [(6)], E. Montagnon [(7)]

[(1)] ESA/ESOC, Darmstadt, Germany, Christoph.Steiger@esa.int
[(2)] Airbus Defence & Space, Immenstaad, Germany, Alessandro.Pasetti.external@airbus.com
[(3)] Airbus Defence & Space, Immenstaad, Germany, Pascal.Espeillac@airbus.com
[(4)]Airbus Defence & Space, Immenstaad, Germany, Tommy.Strandberg@airbus.com
[(5)] ESA/ESTEC, Noordwijk, Netherlands, Massimo.Casasco@esa.int
[(6)]Terma GmbH (c/o ESA/ESOC), Darmstadt, Germany, Alkan.Altay@esa.int
[(7)]ESA/ESOC, Darmstadt, Germany, Elsa.Montagnon@esa.int

ABSTRACT

The 2018 ESA/JAXA BepiColombo mission to Mercury features a complex modular design, with two scientific Mercury orbiters and a cruise module with electric propulsion. A number of novel GNC challenges had to be addressed. Apart from S/C modularity and the complex propulsion systems under GNC control, a main driver for GNC FDIR are strong constraints on S/C attitude and solar array pointing in the harsh thermal environment at close sun distances. Complex module separation and orbit insertion operations take place upon arrival at Mercury, and sophisticated solar array guidance profiles due to power and thermal constraints are needed both in cruise and at Mercury. Attitude constraints are very strict, requiring a dedicated failure control unit to take over control in case of an outage of the on-board computer, as well as frequent updates of critical spacecraft guidance. This paper will present key concepts, challenges and particularities for BepiColombo GNC autonomy and FDIR, covering conceptual design aspects as well as the concrete operations approach.

1 INTRODUCTION

1.1 Mission Overview

BepiColombo is an ESA cornerstone mission to Mercury in collaboration with the Japan Aerospace Exploration Agency (JAXA), with the ESA spacecraft developed by an international consortium led by Airbus Defence and Space Germany. The mission objective is to study the planet and its environment, in particular global characterization of Mercury through investigation of its interior, surface, exosphere and magnetosphere.

BepiColombo consists of two scientific spacecraft, ESA's Mercury Planetary Orbiter (MPO) and JAXA's Mercury Magnetospheric Orbiter (MMO), launched together as a single composite, including a dedicated propulsion module (MTM). BepiColombo is planned to be launched in Oct 2018 with Ariane-5 from Kourou. The launch will be followed by a 7 years cruise phase, including planetary swingbys at Venus and Mercury, eventually achieving a weak capture by Mercury in late 2025 (see Fig. 1).

During the cruise phase, electric propulsion will be used for extended periods of time. This is provided by the MTM module, which will be jettisoned at Mercury arrival. The MMO will be delivered to its operational orbit, and finally the MPO will be put into a 1500x480 km polar orbit (orbital period of about 2.2h) to start its scientific mission, planned to last for one Earth year (1 year extension possible).

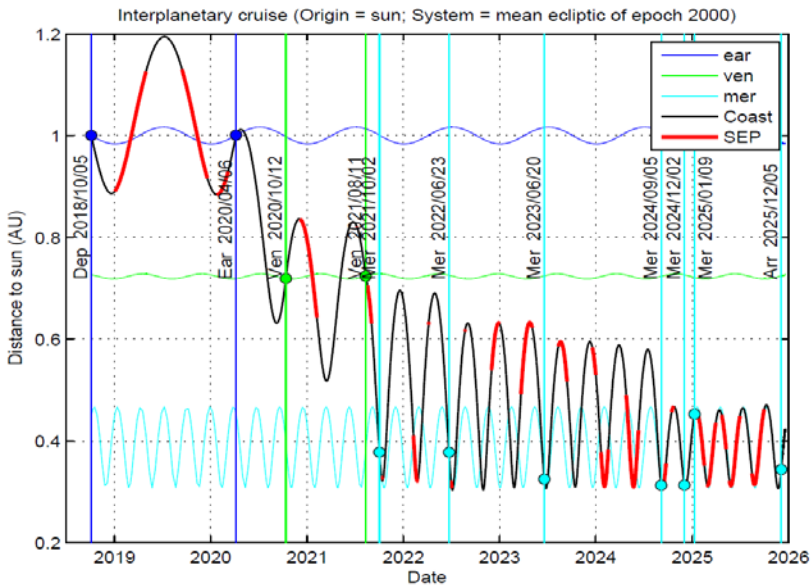

Figure 1. Trajectory for Oct 2018 launch, showing sun distance, electric propulsion usage (SEP), and planetary flybys.

1.2 The BepiColombo Spacecraft

See Fig. 2 and 3 for an artist's view of the spacecraft. The combined stack can have the following configurations:

- Mercury Composite S/C Cruise (MCSC): MTM, MPO, MMO sunshield (MOSIF) and MMO

- Mercury Composite S/C Approach (MCSA): MPO, MOSIF and MMO following separation of the MTM

- Mercury Composite S/C Orbit (MCSO): MPO and MOSIF following release of the MMO

The JAXA-provided MMO is a passive passenger during cruise. The control of the composite is done centrally within the MPO.

The MPO accommodates 11 scientific instruments and has a box-like shape with a size of 3.9×2.2×1.7 m, and a dry mass of about 1080 kg. The tremendous heat load at Mercury (solar flux up 15 kW/m^2, Mercury infrared and albedo radiation up to 4.6 kW/m^2) imposes strong requirements on the spacecraft design, requiring high-temperature multi-layer-insulation and solar

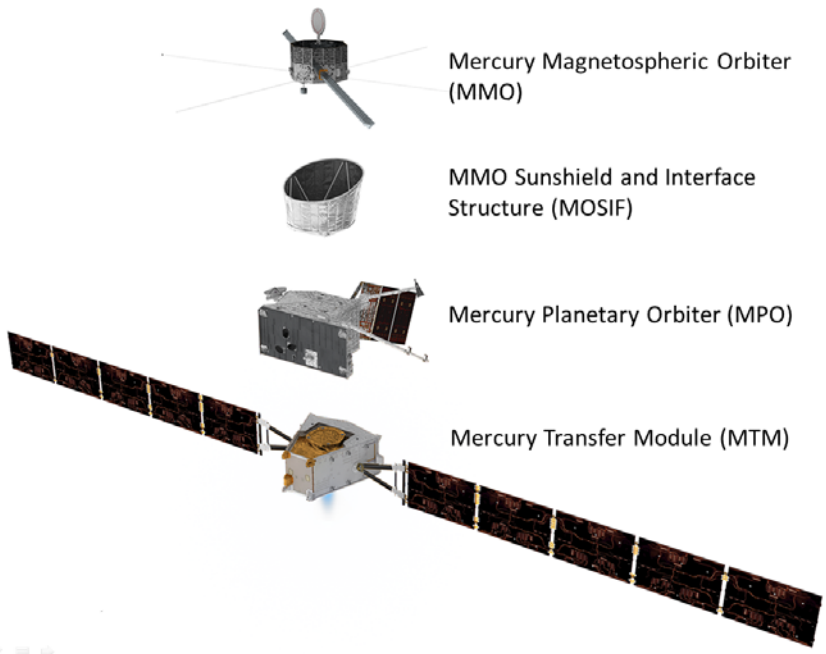

Figure 2. BepiColombo spacecraft in exploded view.

array technology. A radiator to dump excess heat into space is mounted on one S/C side, which may not be exposed to sun or Mercury. The MPO AOCS performs 3-axis stabilised attitude and orbit control in the various spacecraft configurations, using a wide variety of sensors and actuators. For communications, the MPO uses a X/Ka-band deep space transponder with moveable high and medium gain antennae (HGA/MGA).

The MTM provides propulsion means for cruise. Apart from dual mode bi-propellant chemical propulsion, it features electric propulsion with 4 moveable, Kaufman-type thrusters (max thrust 145 mN). The high power demand by the MTM electric propulsion (up to 11 kW) is satisfied with large solar arrays (area of over 40 m^2 in total) using the same high-temperature technology as for the MPO.

See [1] for more details.

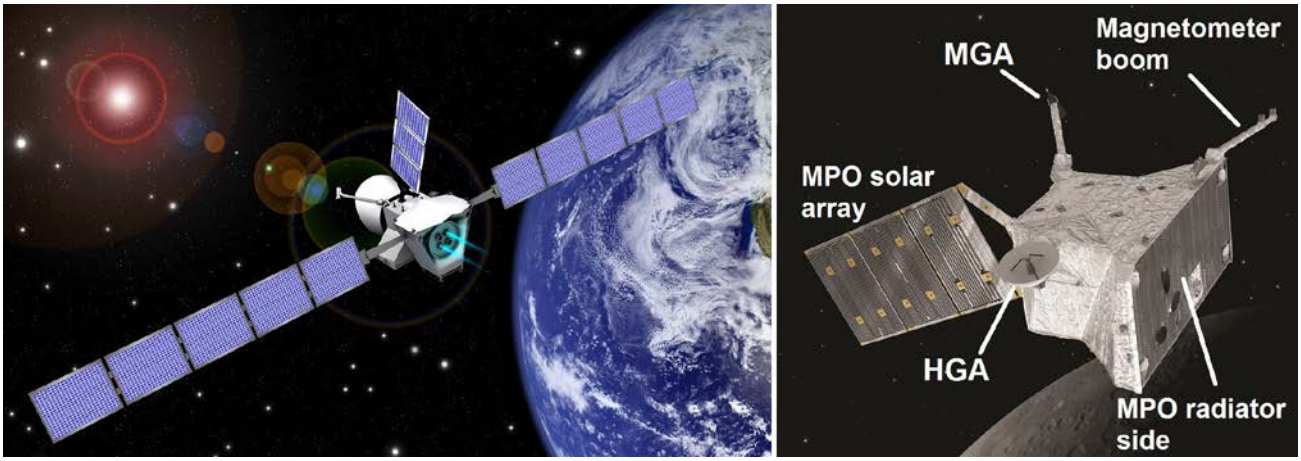

Figure 3. BepiColombo in cruise configuration (left), MPO at Mercury (right).

2 OVERVIEW ON AOCS, AUTONOMY AND OPERATIONS

2.1 The Attitude and Orbit Control System

The AOCS performs 3-axis stabilised attitude and orbit control employing star trackers, inertial measurement units, fine sun sensors, reaction wheels and chemical as well as electric propulsion. AOCS design is driven by S/C modularity and the challenging environment. The AOCS features special guidance profiles for the MPO solar array (to avoid overheating) and rapid S/C attitude stabilisation in case of contingencies. The on-board software implementing all AOCS tasks is running on the MPO on-board computer (OBC), controlling all MPO and MTM equipment. A separate processing unit, the Failure Control Electronics (FCE), is taking over S/C attitude control in case of transient unavailability of the main on-board computer at safe mode entry, when the on-board computer is rebooting. The FCE is running a simplified version of the AOCS software, using only chemical propulsion and inertial measurement units to control S/C attitude.

Fig. 5 gives an overview of the various MPO and MTM units used by the AOCS. Spacecraft modularity requires to have dedicated chemical propulsion systems on MPO and MTM (with two sets of thrusters each to enable required manoeuvres under the strict attitude constraints), dedicated sets of fine sun sensors, and solar array drive mechanisms (SADE) for MTM and MPO solar arrays. The four electric propulsion thrusters are moveable using thruster pointing mechanisms (TPM).

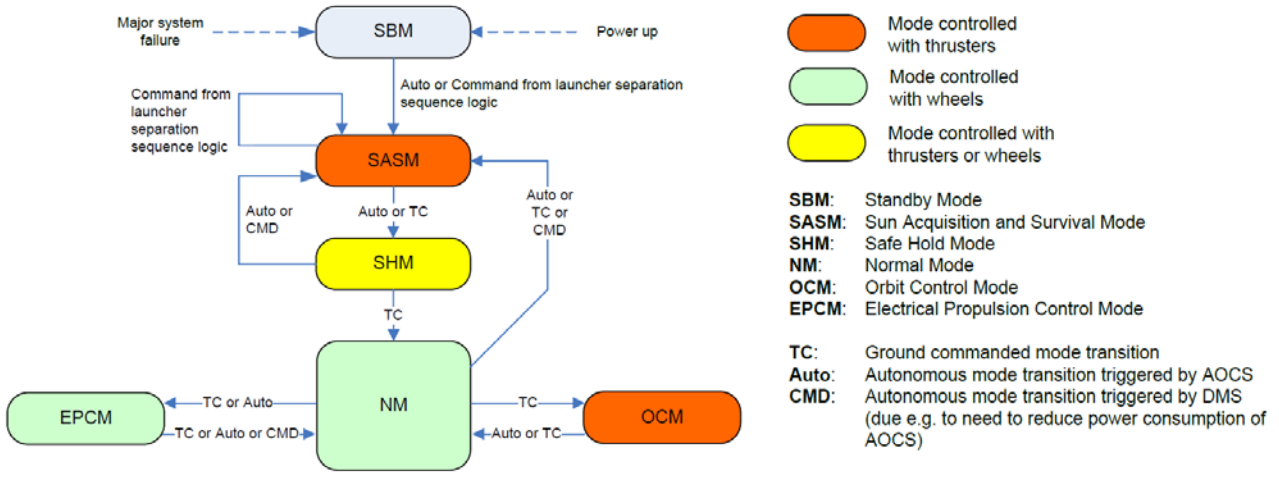

Figure 4. AOCS modes overview.

Fig. 4 gives an overview of AOCS modes and mode transitions:

- *Standby Mode (SBM):* the AOCS is inactive with all units switched off. SBM is used for ground testing, and is only entered transiently during flight (e.g. after safe mode entry).
- *Sun Acquisition and Survival Mode (SASM):* ultimate backup mode ensuring S/C survival in case of major on-board contingencies. Attitude control with thrusters only. Initially the S/C is sun pointed purely based on ground-provided sun ephemerides and the last known attitude (propagated in the future by IMU measurements), while sun sensors and then star trackers are brought into the control loop later on. In SASM, the S/C rotates around the sun line (in line with the orbital motion around Mercury when in MPO configuration), pointing the medium gain antenna (MGA) such that it sweeps over the Earth once per revolution.
- *Safe Hold Mode (SHM):* the S/C is pointed according to ground provided polynomial profiles. At mode entry, attitude control is done

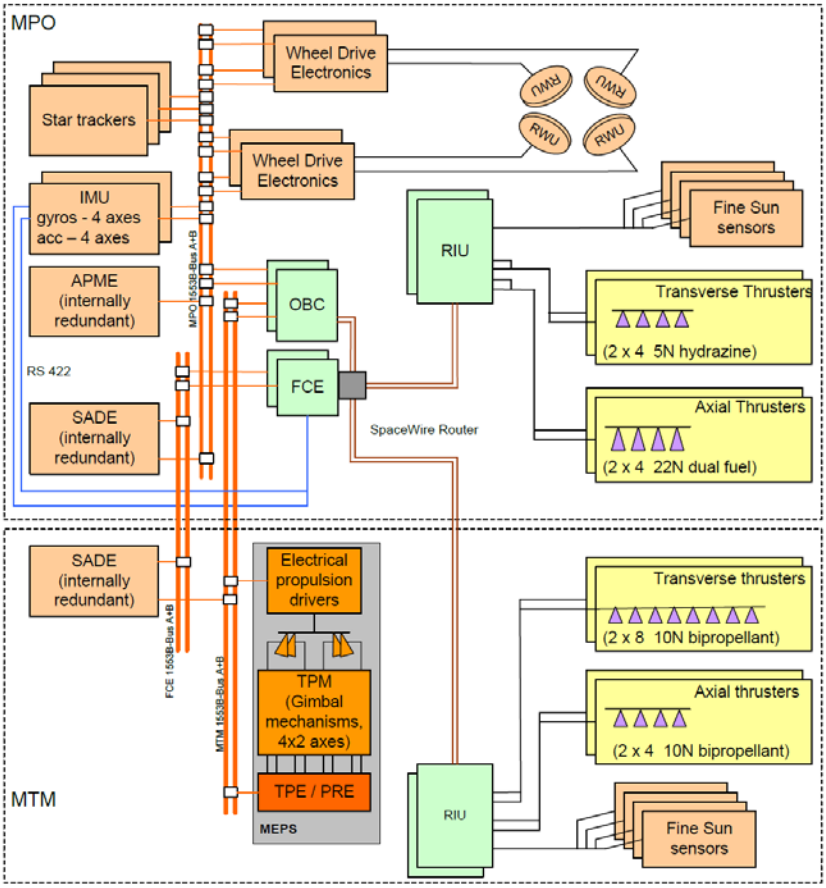

Figure 5. AOCS hardware architecture.

with thrusters, while later reaction wheels are brought into the loop. This is the highest mode that may be entered autonomously following S/C safe mode entry. The MGA is pointed permanently to Earth based on ground-provided Earth ephemerides.

- *Normal Mode (NM):* nominal operating mode. Attitude estimation and control as in the later stages of SHM. The steerable high gain antenna (HGA) is used for communications.
- *Orbit Control Mode (OCM):* mode for performing trajectory correction manoeuvres using chemical propulsion. Attitude estimation as in NM. Attitude control performed with thrusters, while reaction wheels are kept at constant speeds.
- *Electric Propulsion Control Mode (EPCM):* mode for electric propulsion usage (MCSC configuration only). Attitude control and estimation as in NM.

An in-depth description of the BepiColombo AOCS can be found in [2].

2.2 Autonomy and FDIR

A hierarchical FDIR concept has been implemented across the system [2]. To maximize system availability for normal operations, the aim is to recover from failures at the lowest possible level, where possible, before recourse to a higher level involving system back-up modes. This is handled by a Redundancy Management Level at the bottom and a System Safety Level at higher stages of the hierarchy, which -in a last stage- serves to safe-guarding the system by means of hardware temperature and battery low voltage alarms. The essential difference between the two global levels is that in the Redundancy Management Level the failure can be unambiguously identified and isolated by local reconfiguration, whereas in the System Safety Level, the origin of the problem cannot be immediately identified on-board and therefore the principle ‘safety first’ must be followed to avert possible danger.

The AOCS FDIR is conceptually embedded into the System FDIR, though it represents a self-standing function. The AOCS FDIR detects and isolates failures within the AOCS function. The AOCS FDIR has a hierarchical structure and is composed of three levels: 1) unit level, 2) functional level (e.g. cross check between units) and 3) the global level (e.g. spacecraft rate and attitude monitoring). The tuning of the FDIR surveillance thresholds ensures that the lower levels trigger before the higher levels. The reaction to a failure depends on the failure and the associated FDIR level, but is in general such that the impact to the overall system is the minimum required to isolate the suspected failure.

Owing to the harsh thermal environment and resulting strict attitude constraints, a prime objective of the FDIR is to safeguard the spacecraft attitude at all times. This is ensured through the FCE taking over control at safe mode entry, as well as by maintaining correct attitude information on-board even across an on-board computer reset and resulting safe mode entry. The AOCS does not perform an attitude acquisition from “lost in space” conditions when in SASM at safe mode entry (e.g. sun search using sun sensors), but is instead relying on attitude context information continuously maintained, allowing a rapid correction of any mispointing discovered.

In safe mode, the AOCS is in SASM and eventually SHM (depending on the severity of the failure), ensuring the spacecraft is in a thermally safe attitude (which depends on the spacecraft configuration, see Fig. 6) and performing a rotation around the sun line, which must be in synch with the orbital motion around Mercury in MPO and MCSO configurations.

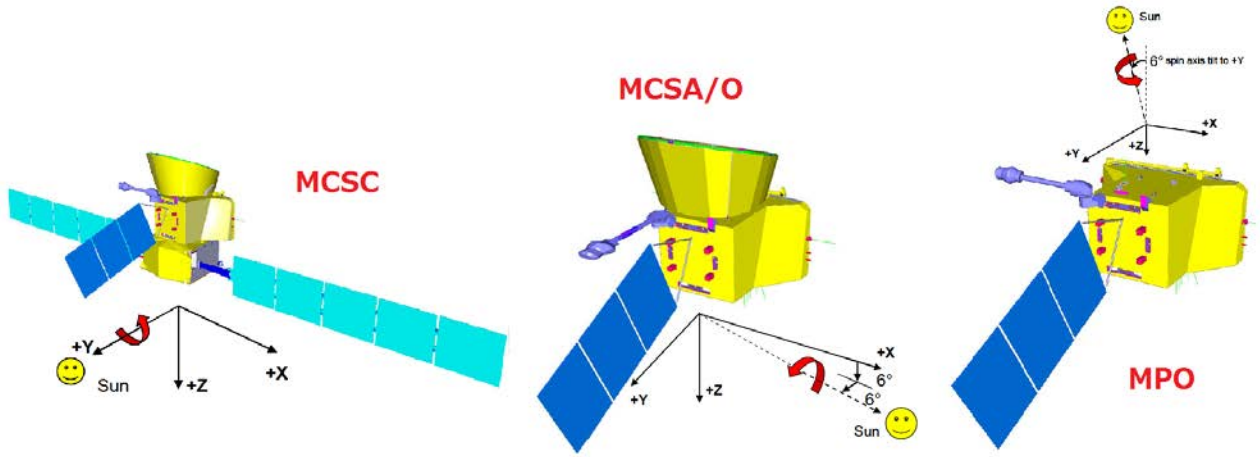

Figure 6. Different safe mode attitudes depending on S/C configuration: rotation around the sun line with +Y sun pointing for MCSC, sun close to +X for MCSA/O, sun close to –Z for MPO.

2.3 Operations Setup and Approach

Operations of the composite spacecraft and the MPO will be conducted from ESA's European Space Operations Centre (ESOC) in Darmstadt, Germany. BepiColombo uses the typical setup for ESA/ESOC deep space missions, including a SCOS-2000 based mission control system, a standalone mission planning system, and a SIMSAT-based S/C simulator. The simulator is a key tool for operations preparation, as it is running the platform on-board software on a processor emulator, allowing testing with very high fidelity. An "Engineering Test Bed (ETB)" will be delivered from Airbus Defence and Space to ESOC shortly before launch.

Operations of BepiColombo are performed by the Flight Control Team (FCT), a team of about 10 engineers and controllers at launch. The FCT is interfacing with various multi-mission support groups at ESOC, including Flight Dynamics (in charge of orbit determination and command generation for AOCS guidance and control), software support for the mission control system, and ground station operations. For deep space missions, there is a particularly close relation to the Flight Dynamics team due to the complex navigation and AOCS operations activities.

Prior to launch, the FCT deals with all aspects of operations preparation. Key activities include (i) specification and acceptance testing of mission control system, planning system and simulator, (ii) preparation of operational products (writing of the Flight Operations Plan (FOP) as well as population of the industry-provided spacecraft database), (iii) execution of tests with the spacecraft flight model and the engineering test bed to validate the ESOC ground segment and operational products. AOCS operations preparation is addressed in more detail in [3].

3 GNC AUTONOMY AND FDIR CHALLENGES

3.1 The Failure Control Electronics (FCE): Control in Failure Cases

At Mercury, compliance with thermal constraints requires that the spacecraft attitude remain at all times within a very narrow corridor. Under normal conditions, this is ensured by the OBC. If, however, there is a system alarm, the OBC is rebooted and remains unavailable for about 30-40 seconds. If the alarm occurs during a thruster-controlled slew, the high angular rate during the OBC outage results in an unacceptably large de-pointing. In order to address this situation, the Failure

Control Electronics (FCE) was introduced as a back-up for the OBC to take control of the spacecraft in the event of a system alarm. The basic design requirements for the FCE accordingly are: (a) maximum decoupling between FCE and OBC (to avoid failure propagation between the two platforms) and (b) high FCE readiness (to minimize the duration of control outages).

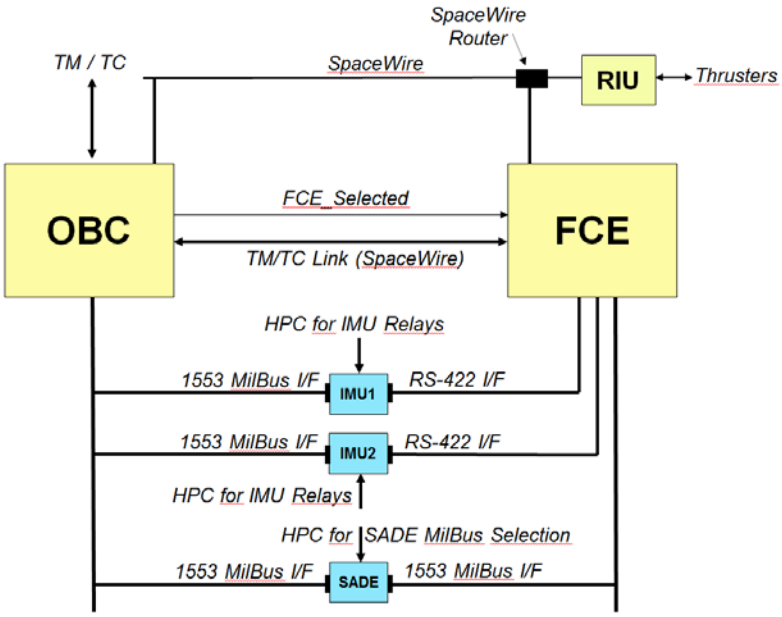

Figure 7. Failure Control Electronics (FCE) implementation and interfaces.

The FCE is started after solar array deployment and then it continues running in parallel to the OBC. If there is a system alarm, a hardwired signal is sent to the FCE causing it to take over control of the spacecraft. The FCE then waits for the OBC to resume control of the spacecraft (nominally, seven minutes after the alarm).

Fig. 7 gives an overview of FCE interfaces to OBC and spacecraft equipment. The FCE consists of a simplified version of the OBC with the following characteristics, each of which is discussed in more detail here below:

1. Internal redundancy
2. Hardware interface to two IMUs
3. Hardware interface to prime and redundant CPS branches
4. Spacewire-based TM/TC Link with the OBC
5. Software implementing an Attitude Propagation Function and a Control Function

(1) Internal redundancy is strictly speaking unnecessary when the FCE is in control of the spacecraft (since the FCE is itself a back-up unit), but is required to cover other failure modes (e.g. to ensure FCE availability for the remainder of the mission in case of a single failure on FCE side).

(2) The spacecraft has two identical IMUs, each of which provides rate measurements both to the FCE and to the OBC. At any given time, one of the two IMUs is “owned” by the FCE and the other is “owned” by the OBC (the ground – and only the ground – can swap the IMU allocation). The “owner platform” is responsible for switching on and off the IMU, but both platforms have access to measurements from both IMUs. Since the IMUs are internally redundant (two electronics and four gyroscopic and accelerometric channels), this results in multiple levels of redundancy while preserving the functional decoupling of FCE and OBC.

(3) The FCE needs access to the CPS to control the spacecraft in the event of an alarm. In order to preserve the FCE/OBC decoupling, the two platforms are configured to use two different CPS branches (nominally, the OBC uses branch A and the FCE uses branch B, but the ground can

change these allocations).

(4) In order to avoid failure propagation, neither platform can send commands to the other. Each platform, however, broadcast information to the other but, again to avoid failure propagation, the use of this information is severely restricted: a platform only uses information from the other platform to recover from a failure. This is considered safe because, under the single failure hypothesis, the presence of a failure on platform A implies that there is no failure on platform B. Thus, for instance, after a system alarm on the OBC, the OBC re-initializes its estimate of the spacecraft attitude by taking over the attitude estimate broadcast by the FCE. This is considered safe because, the very fact that a system alarm has occurred on the OBC, implies that the FCE is healthy and that its attitude estimate can be trusted.

(5) The Attitude Propagation Function on the FCE runs when the OBC is in control of the spacecraft. As its name implies, this function continuously propagates the spacecraft attitude. This FCE needs to know the spacecraft attitude because, in the event of an alarm, it is responsible for re-orienting the spacecraft to keep it thermally safe. Attitude propagation is done using a Gyro-Stellar Estimator which mixes IMU measurements and STR measurements. The STR measurements are broadcast by the OBC. The FCE only uses them if measurements from at least two STRs are available and if they are consistent. The Control Function on the FCE is triggered within a few seconds of an alarm occurring on the OBC and it performs: rate reduction, slew of the spacecraft to a Sun-pointed attitude, and rotation of the array to a safe ("edge-on") attitude with respect to the Sun.

3.2 Solar Array Control in Cruise and at Mercury

Because of the intense heat, the single-sided MPO solar array features a mix of solar cells and Optical Surface Reflectors (OSR) to keep its temperature below 200°C. The large MTM solar arrays (40 m^2 area in total) use the same high-temperature technology and can provide up to 13 kW power. During cruise, the entire composite is powered through the MTM SA, while the MPO SA is only required at Mercury (remaining edge on to the sun during cruise to limit degradation).

Both arrays can be rotated around their longitudinal axis using solar array drive mechanisms under AOCS control. To maintain the temperature in the allowed range, a special control approach is required, commanding an offpointing while still achieving sufficiently high power generation.

MPO solar array control at Mercury:

Due to Mercury albedo and infrared radiation, the maximum exposure of the MPO solar array towards the sun varies over the MPO operational orbit. The MPO SA hence has to be rotated continuously to avoid violation of temperature limits.

The allowed sun aspect angle and the corresponding MPO SA angle is calculated by Flight Dynamics based on a thermal model provided by the S/C manufacturer, specifying the MPO SA target operating temperature as input. The commanding products for updating the on-board MPO solar array guidance are then generated accordingly. Figure 8 shows the complicated AOCS data structure for the MPO SA guidance: each MPO orbit will be covered by an "Envelope" consisting of 7 segments (specified as Chebychev Polynomials of maximum order 12), which is valid for a specifiable number of orbits.

The thermal model used for the MPO solar array will be calibrated in orbit. This activity will already start after MTM separation about 2 months before Mercury capture, when the S/C is not yet

in Mercury orbit and hence MPO SA control is still less critical.

MTM solar array control in cruise:

Down to a sun distance of 0.62 AU, the MTM solar array can be pointed straight at the sun with no thermal limitations. At sun distances smaller than that, the array must also be offpointed to not violate maximum operating temperatures. The operational approach is as follows:

- Outside of electric propulsion thrust arcs: S/C power consumption is low, allowing to offpoint the array to reduce degradation effects. Array pointing is commanded such that a fixed amount of power is available to operate the S/C. This is done using a curve provided by the S/C manufacturer, showing the sun distance vs. the sun aspect angle required to obtain the desired amount of power.
- During electric propulsion thrust arcs: the array is pointed to supply maximum power during thrust arcs, with the electric propulsion system as the main power consumer. Information on the maximum allowed sun aspect angle depending on sun distances below 0.62 AU has been provided by the manufacturer. As the power available drives the maximum possible thrust level for electric propulsion –in turn impacting the trajectory–, a dedicated interface will be put in place between the FCT and Flight Dynamics, with the FCT providing the maximum power available based on the latest in-flight S/C power budget.

As for the MPO solar array, it will be essential to calibrate MTM solar array performance in flight, to adjust the models and processes for MTM SA control accordingly.

SHM SA Guidance Envelopes for MCSA/ MCSO and MPO	
Segment Table 14 MCSA/O	Segment Table 23 MPO
Envelope 1	
N_repititions (# of orbits)	1x2 byte
Coefficients of polynomial #1	13x4 byte
Coefficients of polynomial #2	13x4 byte
Coefficients of polynomial #3	13x4 byte
Coefficients of polynomial #4	13x4 byte
Coefficients of polynomial #5	13x4 byte
Coefficients of polynomial #6	13x4 byte
Coefficients of polynomial #7	13x4 byte
Reference time t1	1x4 byte
Reference time t2	1x4 byte
Reference time t3	1x4 byte
Reference time t4	1x4 byte
Reference time t5	1x4 byte
Reference time t6	1x4 byte
Sum of 1 Envelope	390 byte
Envelope ...	
Envelope 39	
Checksum (calculated OB) **+ write counter**	

SHM SA Guidance Global Data for MCSA/ MCSO and MPO	
Segment Table 15 MCSA/O	Segment Table 24 MPO
Tstart of first pattern (C.U.C.)	1x6 byte
Number of valid patterns (envel.)	1x2 byte
Orbit/revolution period (Torb)	1x8 byte
Checksum (calculated OB) **+ write counter**	

Figure 8. Data structure for MPO solar array guidance.

The AOCS guidance function for MTM SA control is simpler than for the MPO SA, relying on a table containing 20 segments with time intervals and the corresponding MTM SA angle. It is currently estimated that at most 2 segments per day are needed during cruise, compatible with a weekly MTM SA guidance update.

FDIR aspects:

Just as important as the provision of correct solar array guidance by ground, the following dedicated on-board FDIR is monitoring solar array control:

- AOCS local surveillances on the MPO or MTM solar array drive electronics (SADE) monitor health of the SADE, including checks on (i) 1553 mil bus communications between OBC and SADE, (ii) SADE health status based on SADE acquisitions, (iii) validity of measured solar array position, (iv) consistency of measured vs. commanded solar array position and rates. In case of trigger, a local reconfiguration to the redundant SADE (or a safe mode entry in case no redundancy is available) is performed.
- AOCS global surveillance triggering an immediate safe mode in case there is no valid

MPO/MTM solar array guidance profile (e.g. in case of expiration of the currently loaded profile owing to an operator mistake).

- As a final safety barrier on system level, software-independent temperature alarms on the MPO solar array and on one MTM solar array wing are implemented, routing three analogue thermistors lines to the OBC, cross-strapped to each reconfiguration module (RM). In case a critical temperature threshold is reached, the RM triggers a safe/survival mode entry.

3.3 Mercury Orbit Insertion Operations

Separation of the MTM is performed about 2 months before the S/C is weakly captured by Mercury in an initial orbit of 178005x674 km (Oct 2018 launch scenario). The Mercury Orbit Insertion phase (MOI) starts thereafter, including a series of chemical propulsion manoeuvres with the aim of achieving the operational orbit firstly for the MMO (11639x590 km, i=90 deg, RAAN=67.8 deg, w=-2 deg) and eventually for the MPO (1500x480 km, i=90 deg, RAAN=67.8 deg, w=16 deg).

Operations in this phase are driven by the following main constraints:

- Below a certain altitude, the S/C rotation around the sun line has to be synchronized with the orbital motion around Mercury, to ensure thermal limits are not violated.
- Manoeuvres shall not take place around Mercury perihelion ±60 deg due to thermal constraints.
- The S/C undergoes eclipse seasons during MOI, which are power-critical in the higher orbits. Special operational measures like boost heating prior to eclipse entry are expected to be required for ensuring a positive power budget. It is imperative to sufficiently lower the orbit and separate the MMO prior to the aphelion eclipse season.
- Operational constraints on manoeuvre execution: a delta time of at least 3 days is observed between manoeuvres. No manoeuvres are allowed during solar conjunction periods (no ground contact possible) and as from 7 days before (a failed manoeuvre shortly before a solar conjunction may lead to the S/C using incorrect guidance and hence a violation of thermal constraints, with no ground intervention possible).

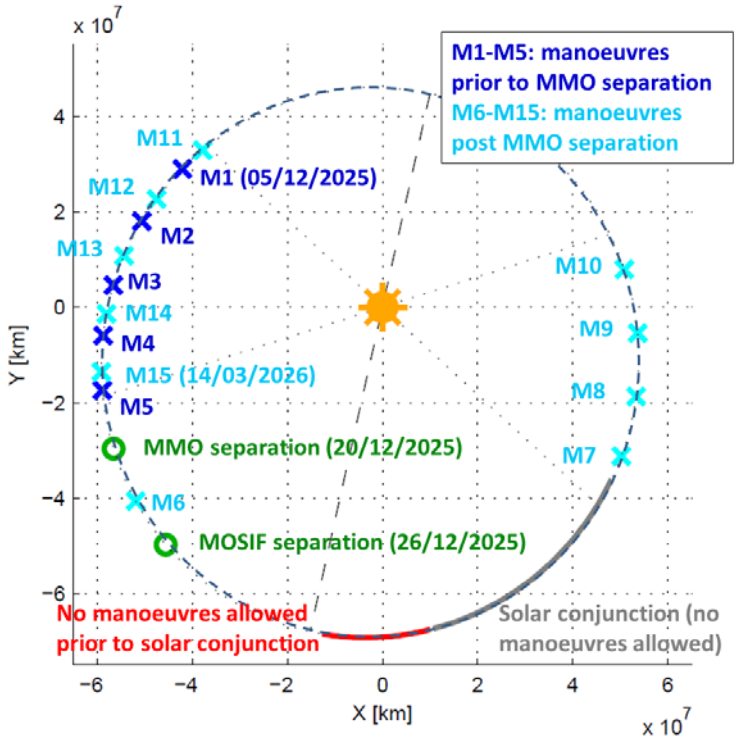

Figure 9. Mercury Orbit Insertion (MOI) sequence for launch in Oct 2018 (depicted in ecliptic J2000 frame).

This leads to a rather constrained MOI timeline as shown in Fig. 9. Five

initial burns are performed to reduce the apoherm altitude to the MMO target value of 11639 km. Following separation of the MMO, the MOSIF is separated shortly after, bringing the S/C into MPO configuration. Another 10 manoeuvres are then required to achieve the MPO operational orbit. Duration of the MOI phase is about 3 months, with a total deltaV for the sequence shown in Fig. 9 of about 963 m/s.

Activity
Before Orbit Insertion Burn
Upload of GCF Data in SGM RAM and verify
Set IS_GCF_ARMED = TRUE in SGM RAM and verify
Upload of SASM/SHM Profiles into SGM EEPROM with IS_GCF_USED = TRUE
Upload of OCM parameters
Upload of NM SA and attitude guidance profiles for insertion burn and pre/post burn
Slew to thrust start attitude and verify
Move HGA & MGA to required orientation for mass balance
start MPO catalyst bed heaters
Start calibration of accelerometers
Thrust ramp-up is started
After Orbit Insertion Burn
Move HGA & MGA back to allow communications and setup link configuration
Check S/C health and achieved Delta-V
After confirmation of orbit set IS_GCF_ARMED = FALSE in SGM RAM and verify
Upload new SASM/SHM profiles into SGM EEPROM for current orbit characteristics with IS_GCF_USED = FALSE
Set IS_GCF_ARMED = FALSE

Figure 10. Activities around manoeuvres during MOI.

Later in the MOI phase, when at altitudes requiring the S/C attitude motion to be synchronized with the orbital motion around Mercury, failures during orbit insertion burns leading to aborting the burn are problematic for thermal and power reasons: the tight constraints on S/C attitude and solar array pointing with respect to Mercury and Sun mean that the previously loaded guidance profiles –which are assuming the manoeuvre to complete successfully– are not in line with the actual spacecraft orbit.

The FDIR approach to ensure S/C safety in case of problems preventing completion of MOI manoeuvres is to enter safe mode, and use the so-called Guidance Correction Function (GCF) to change safe/survival mode guidance as required given the premature abort of the manoeuvre. The GCF adapts the previously loaded SASM/SHM autonomous attitude guidance parameters for safe mode as a function of the achieved delta-V measured with the accelerometers (the usage of which is mandatory for MOI manoeuvres), such that they fit the actual orbit resulting from the incomplete orbit insertion burn. The GCF function needs to be configured correctly by ground for each insertion manoeuvre, using information stored in SGM RAM, the non-permanent part safeguard memory. Figure 10 shows the typical set of activities around MOI burns, including handling of guidance for NM/OCM and safe mode, and GCF setup.

3.4 Guidance for Safe and Survival Mode at Mercury

The following guidance and ephemeris context is required by the AOCS following a safe/survival mode entry in MPO configuration, with the AOCS firstly entering Sun Acquisition and Survival Mode (SASM) and eventually performing a transition to Safe Hold Mode (SHM):

- *Last known S/C attitude and rates:* context information stored in the non-permanent area of safeguard memory (SGM RAM) at 1Hz when the AOCS is running nominally.
- *Sun and Earth ephemerides:* in the early phases of SASM, sun pointing is established based on last known S/C attitude/rates and the sun direction based on the sun ephemerides. Earth ephemerides is required for pointing the medium and high gain antennae to the Earth.
- *MPO SASM attitude and solar array guidance:* SASM attitude guidance specifies S/C rotation rate and phasing for the rotation around the sun line, which has to be in synch with

the orbital motion around Mercury, ensuring the radiator side of the MPO (-Y side, ref. Fig. 6) is never facing Mercury, see Fig. 11. SASM solar array guidance consists of tables with time ranges and commanded sun aspect angles, allowing for a step-wise adjustment of the array position as the S/C rotates around the sun line.

- *MPO SHM attitude and solar array guidance:* SHM is the highest mode reached autonomously after safe/survival mode. For MPO, its attitude and solar array guidance is specified as Chebyshev polynomials in safeguard memory.

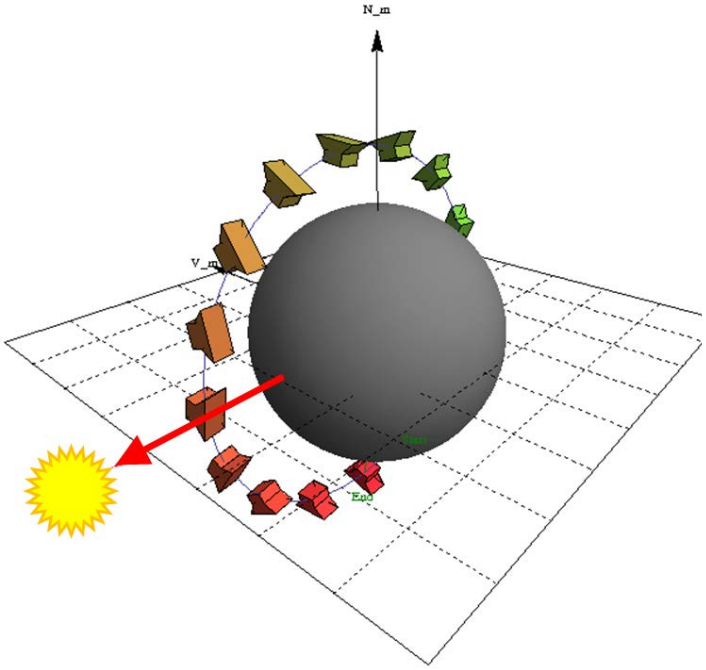

Figure 11. MPO safe mode attitude: rotation around the sun line in synch with the orbital motion.

Apart from the last known S/C attitude and rates maintained autonomously in-flight, ground is in charge of keeping the guidance up to date. While sun and Earth ephemerides don't need to be updated frequently, this is not the case for the attitude and solar array guidance in safe mode: the orbit of the MPO around Mercury is left to drift, hence it is expected that weekly safe mode guidance updates are needed to adhere to the strict attitude constraints. If the spacecraft used wrong guidance, the mission may be lost at the next safe mode. Therefore, utmost care has to be taken to ensure the regular guidance update is done correctly, excluding the possibility of the AOCS using an incorrect or incomplete set of guidance tables. The following measures are taken on-board and on ground:

- *On-board mechanism:* the on-board software offers a special "Segment Tables" service for managing the guidance in safeguard memory, ensuring that (i) the tables are stored in quadruple redundancy (ensuring a consistent set of data unless all four SGM banks are subject to failures) and (ii) the guidance tables are globally consistent (i.e. partial update of the guidance tables leading to inconsistent information is not allowed).
- *Ground preparation:* the guidance products will be prepared by ESOC Flight Dynamics, which includes verification by an independent group within the team. While such products are normally uplinked by the flight control team without further checks, in this case additional confidence checks will be carried out, for instance tests on the spacecraft simulator. The details will be worked out after launch, during the 7-year cruise to Mercury.

4 CONCLUSION AND OUTLOOK

The BepiColombo mission to Mercury requires a highly complex GNC, owing to the S/C modularity as well as the strong constraints on S/C attitude and solar array pointing in the harsh thermal environment at close sun distances. Consequently, GNC FDIR and Autonomy aspects are

particularly challenging. Key challenges include (i) the need of a hot-redundant processor scheme together with uninterrupted on-board 3-axis attitude knowledge for fast attitude recovery during emergency reconfigurations, (ii) complex module separation and orbit insertion operations upon arrival at Mercury, including a function for autonomous correction of spacecraft guidance in case of manoeuvre aborts, (iii) sophisticated solar array guidance profiles due to power and thermal constraints, (iv) frequent updates of spacecraft safe mode guidance in Mercury orbit to adjust for the drift of the spacecraft orbit.

To be launched in less than two years, the BepiColombo spacecraft is currently undergoing final integration and testing at ESA/ESTEC, with the S/C design and operations concepts fully finalised. The combined ESA and industry team is looking forward to performing the remaining final activities to bring this most challenging mission into orbit.

5 LIST OF ACRONYMS

AIT	Assembly, Integration and Test
AOCS	Attitude and Orbit Control System
APME	Antenna Pointing Mechanism Electronics (for High Gain and Medium Gain Antenna)
BMCS	BepiColombo Mission Control System
CPS	Chemical Propulsion System
EPCM	Electric Propulsion Control Mode
ETB	Engineering Test Bed
FCE	Failure Control Electronics
FCT	Flight Control Team
FD	Flight Dynamics
FDIR	Failure Detection, Isolation and Recovery
FOP	Flight Operations Plan
FSS	Fine Sun Sensor
GCF	Guidance Correction Function
HGA	High Gain Antenna
IGST	Integrated Ground Space Test
IMU	Inertial Measurement Unit
JAXA	Japan Aerospace Exploration Agency
LEOP	Launch and Early Orbit Phase
MCS	Mission Control System
MCSA	Mercury Composite Spacecraft Approach (stack consisting of (MPO, MOSIF, MMO)
MCSC	Mercury Composite Spacecraft Cruise (stack consisting of MTM, MPO, MOSIF, MMO)
MCSO	Mercury Composite Spacecraft Orbit (stack consisting of MPO, MOSIF)
MEPS	Mercury Electric Propulsion System
MGA	Medium Gain Antenna
MMO	Mercury Magnetospheric Orbiter (JAXA-provided orbiter)
MOI	Mercury Orbit Injection
MOSIF	MMO Sunshade and Interface Structure
MPO	Mercury Planetary Orbiter
MPS	Mission Planning Systm
MTM	Mercury Transfer Module
NM	AOCS Normal Mode
OBC	On-board Computer
OBCP	On-board Control Procedure

OBT	On-board Time
OCM	AOCS Orbit Control Mode
OSR	Optical Surface Reflector
PRE	Pressure Regulation Electronics (of the electric propulsion)
RAM	Random Access Memory
RM	Reconfiguration Module
RIU	Remote Interface Unit
RWU	Reaction Wheel Unit
SA	Solar Array
S/C	Spacecraft
SADE	Solar Array Drive Electronics
SASM	AOCS Sun Acquisition and Survival Mode
SBM	AOCS Standby Mode
SCOE	Special Checkout Equipment
SEP	Solar Electric Propulsion
SGM	Safeguard Memory
SHM	AOCS Safe Hold Mode
SVT	System Validation Test
TPE	Thruster Pointing Electronics (of the electric propulsion)
TPM	Thruster Pointing Mechanism (of the electric propulsion)

6 REFERENCES

[1] Wilson R. J., Schelkle M., *The BepiColombo Spacecraft, its Mission to Mercury and its Thermal Verification*, 46th Lunar and Planetary Science Conference, The Woodlands, USA, 2015.

[2] Szerdahelyi L., Fugger S., Espeillac P., Monroig G., Pareaud T., Casasco M., *The BepiColombo Attitude and Orbit Control System*, 9th International ESA Conference on Guidance, Navigation & Control Systems (GNC 2014), Porto, Portugal, 2014.

[3] Steiger C., Altay A., Montagnon E., Companys V., *AOCS Operations Preparation for the BepiColombo Mission to Mercury*, *6th European Conference for Aeronautics and Space Sciences (EUCASS)*, Krakow, Poland, 2015.